First Class Govt. Contractor

Since 2009

Voice of Arch. & Eng.

স্থপতি ও প্রকৌশলীর প্রতিধ্বনি



# ALUMINIUM FABRICATIO N

WITH COMPLETE CONSTRUCTION SOLUTIO

www.vaebd.com

CONTENTS

## EXTERIOR


### FACADE PRODUCT : 3

- Spider Point System.
- Patch Fittings System.

### CURTAIN WALL : 14

- Unitized System
- Semi-Unitized System
- Mechanical Structural Glazing (Toggle)
- Stick System Curtain Wall
- Channel Glass Wall
- Casements

### COLLABORATE PRODUCTS : 17

- Aluminum Composite Panel (ACP)
- Perforated Aluminum Shit Panel
- CNC Cutting with ACP & Others Metal
- Sun Breaker
- Terracotta Panel (Clay Based)
- MCM cladding panel

### LOUVER : 23

- Box Louver
- 'Z' LOuverl
- Oval Shape Louver
- Sun Louver

### INTERIOR : 25

- Metal perforated ceiling
- Mineral fiber ceiling
- Cement fiber board
- Plain ceiling
- Gypsum T ceiling
- Grid & Other

### PROJECT : 27




By experts,
for experts

"AT VAE WE BELIEVE COLLABORATION IS THE KING. THAT IS WHY WE'RE PROUD OF THE PARTNERSHIPS THAT WE HAVE BUILT WITH FABRICATORS, INSTALLERS, AND ARCHITECTS THROUGHOUT BANGLADESH AND BEYOND."

# Preface

**Indeed, it is well understood that architects and engineers are the prime essences of modern architecture. They are contemporary, Development-oriented, artistic, and Unique personnel with an aesthetic sense. Modern architecture in Bangladesh has been growing in contrast with the world since our independence.**

**Voice of Arch. & Eng.** has been moving ahead to attain the aim of leading this industry from primary structure to big assignments. It is a great venture while making a design with a simple pencil sketch or with auto CAD or 3D max version

We have been using automatic and semi-automatic machines for total exterior solutions for the very first time in Bangladesh to reduce wastage and ensure optimum quality range. Furthermore, we have introduced technical changes in the building facade and we have also enriched our collection of world-famous facade-related products.

Gradually we have been maintaining international standards and keep on improving them smoothly. We are committed to retaining this trend by working with you continuously. We hope that in the near future, we will get cooperation from you to carry our paces sustainable in the long run.

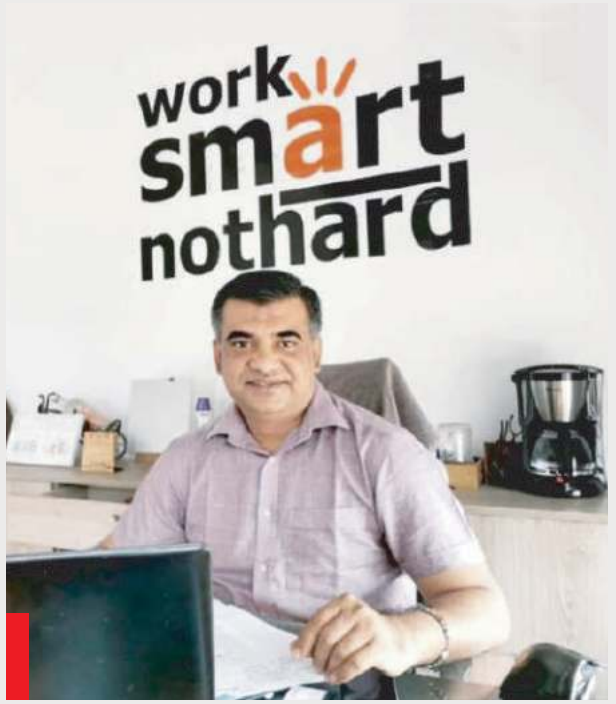


**Syed Md. Tafazzal Hossain Tapu**
**CEO (Operation)**

# Why choose VAE ?

**Mr. CEO of VAE has been experiencing this industry for more than 20 yearsand now we're at the forefront of Facade with aluminium window and door design.**

## But why aluminium?

**It's lightweight, strong, and almost 100% recyclable. It doesn't warp or rust and it is almost maintenance-free. Further more, it's exceptionally versatile and easy to install.**

## Installation & Service




## Excellent Service Is Always Delivered

We are offering Our comprehensive product which is complemented by an expert service proposition. From site survey to design consultation to customization, and installation to post-installation support in every step of the way our trained professionals will be with you.

## Design & Looks

Immerse yourself in a world where innovative aesthetics and timeless elegance converge seamlessly. Our company offers tailored solutions that redefine architectural brilliance. With cutting-edge materials and sustainable design, we create a visual impact that resonates. Our versatile aesthetics span from modern minimalism to opulent intricacy. Step into a world of sophistication where form and function harmonize, turning ordinary spaces into extraordinary works of art. Experience our unwavering commitment to aesthetics and innovation, elevating your projects with style and functionality.

## Performance

With a rich tapestry of industry expertise, our business excels in delivering cutting-edge solutions. Our advanced technology ensures precision and efficiency, while stringent quality control measures guarantee unmatched excellence. We pride ourselves on timely project completion and consistently meeting client deadlines. Explore our impressive portfolio, a testament to our capabilities and quality. Committed to sustainability, we employ eco-friendly practices and materials. Safety is paramount, with rigorous protocols and certifications in place. Our innovation-driven approach, competitive pricing, and client-centered customization have fueled our continued growth, setting us apart as industry leaders.

## Color

Transform your living and commercial spaces into vibrant expressions of your unique style with our glass solutions. Our facade glass for exterior design offers both privacy and aesthetic impact, seamlessly integrated with architectural precision. Customization is at the heart of our offerings, allowing you to choose from a vibrant palette of colors, textures, and finishes. Our commitment to durability ensures that your choices stand the test of time. Stay ahead of design trends with expert guidance, and let your personality shine through every detail. With us, your building is a canvas for creativity, reflecting your personal touch in every corner.

## Security

Elevating security to the highest standard, our glass and aluminum solutions are designed to protect against the most demanding conditions. From fortifying your spaces against wind, earthquake loads, and rain penetration to reducing air leakage and controlling vapor diffusion, we ensure your safety is paramount. Our products not only resist noise, fire, and surface damage but also limit excessive heat loss. With us, security means comprehensive protection, allowing you to enjoy spaces that are impervious to nature's challenges and built to withstand unforeseen circumstances.



# VAE Facade

Over two decades we've been designing unique Facade that exceeds the performance standards expected in modern building design.

Here we've been providing a compiled list of the best window and facade slogan, ideas, taglines, business mottos, and more innovation that we could find.

Our team works hard to help you accumulate your pieces of ideas to give a shape according to your desire. It can be a school, a charity organization, a personal business, or a Company. Our slogans serve as a tool to help you get started.

# CURTAIN WALLS

## STICK SYSTEM

This is the earlier design of curtain wall technology. The wall was installed piece by piece. Usually, the mullion members (which a vertical members) were installed first, followed in turn by the transom members (which a horizontal rail members), and finally the glazing or window units. However, in designs accenting the horizontal lines, the process may be altered to install the larger transoms first. In either case, the transom and Mullion members are often long sections designed to either be interrupted or extended through their intersections. The stick wall system was used extensively in the early years of metal curtain wall development. And it is still widely used as an improved version. Some contractors consider it to be superior to other systems.



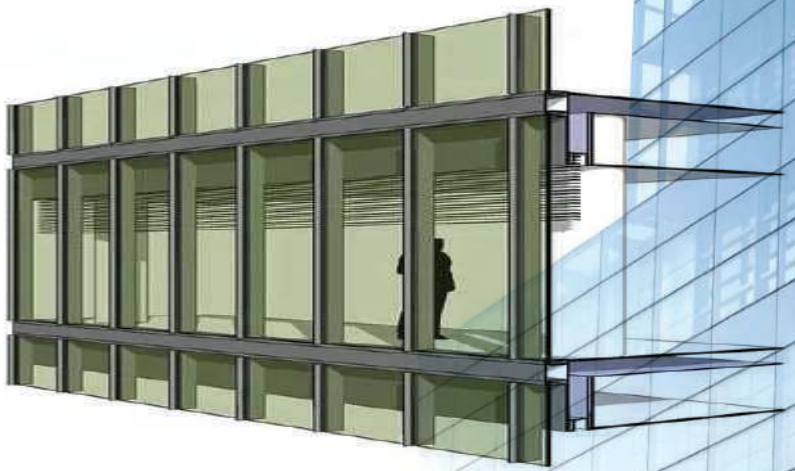



# SEMI-UNITIZED SYSTEM



Semi-unitized curtain wall glazing system is a type of structural glazing where the primary structural framing components are erected individually as an erector set. In this set, the vertical mullions are attached first to the floor slabs and the horizontals are attached to the vertical mullions to resemble a grid. The glass panel and the spandrel which can be either glass or aluminium are shop-glazed and installed into the assembled gridwork. The joineries and perimeter sealants are fields installed. The semi-unitized systems are largely anchored to the face of the slab as embedded plates or inserts.



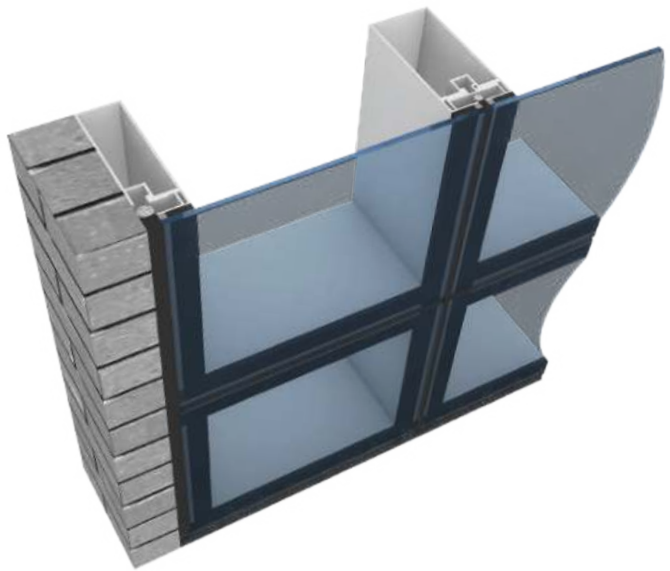

# FACADE

## SPIDER GLASS

### Spider Glazing using Fin Glass

Spider glazing uses toughened fin glass or laminated glass to act as a structural support to withstand wind pressure, internal pressure, and dead weight. It can be done either on the top of the glazing or at the bottom with the support of fin plates spider made of stainless steel.

### Spider glazing using stainless steel

Spider glazing uses mild steel pipes sting or glass fin running vertical and horizontal directions to support larger sizes of glass connecting spider hardware. SS/MS pipes can be any square as per structural consultant's/architect's design specifications.

### Spider glazing using suspension rod cable

Spider glazing concept uses specified suspension rods/cables to support the glass and spider hardware for larger and design-specific elevation.



Spider Glazing Using Fin Glass



Spider glazing using stainless steel



Spider glazing using suspension rod/cable

- Suitable for 10mm to 25mm glass walls
- Point fixed IGUS, up to maximum 42mm thick
- Good corrosion resistance
- Maximum transparency
- Unobtrusive, flush appearance

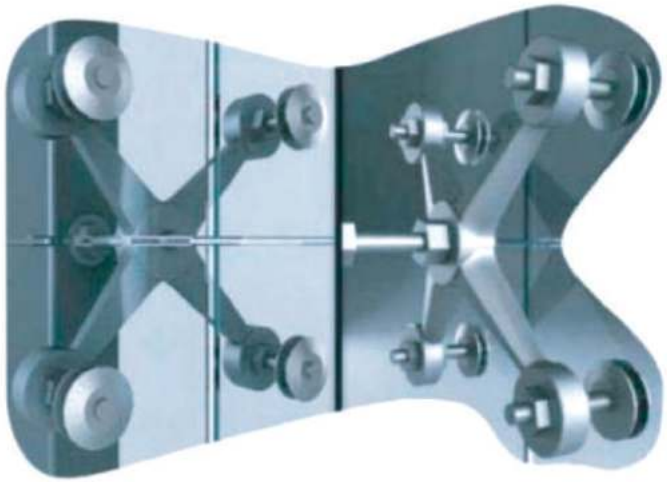

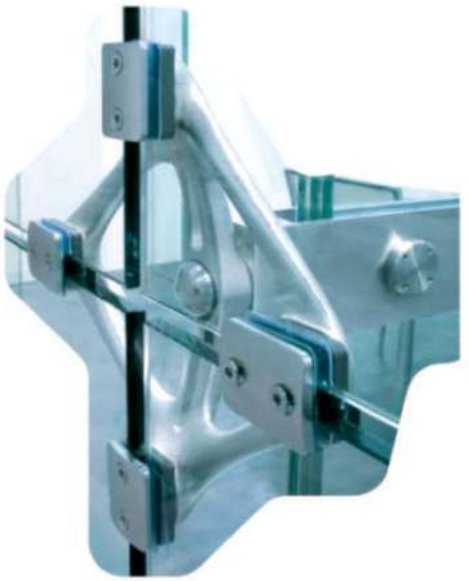

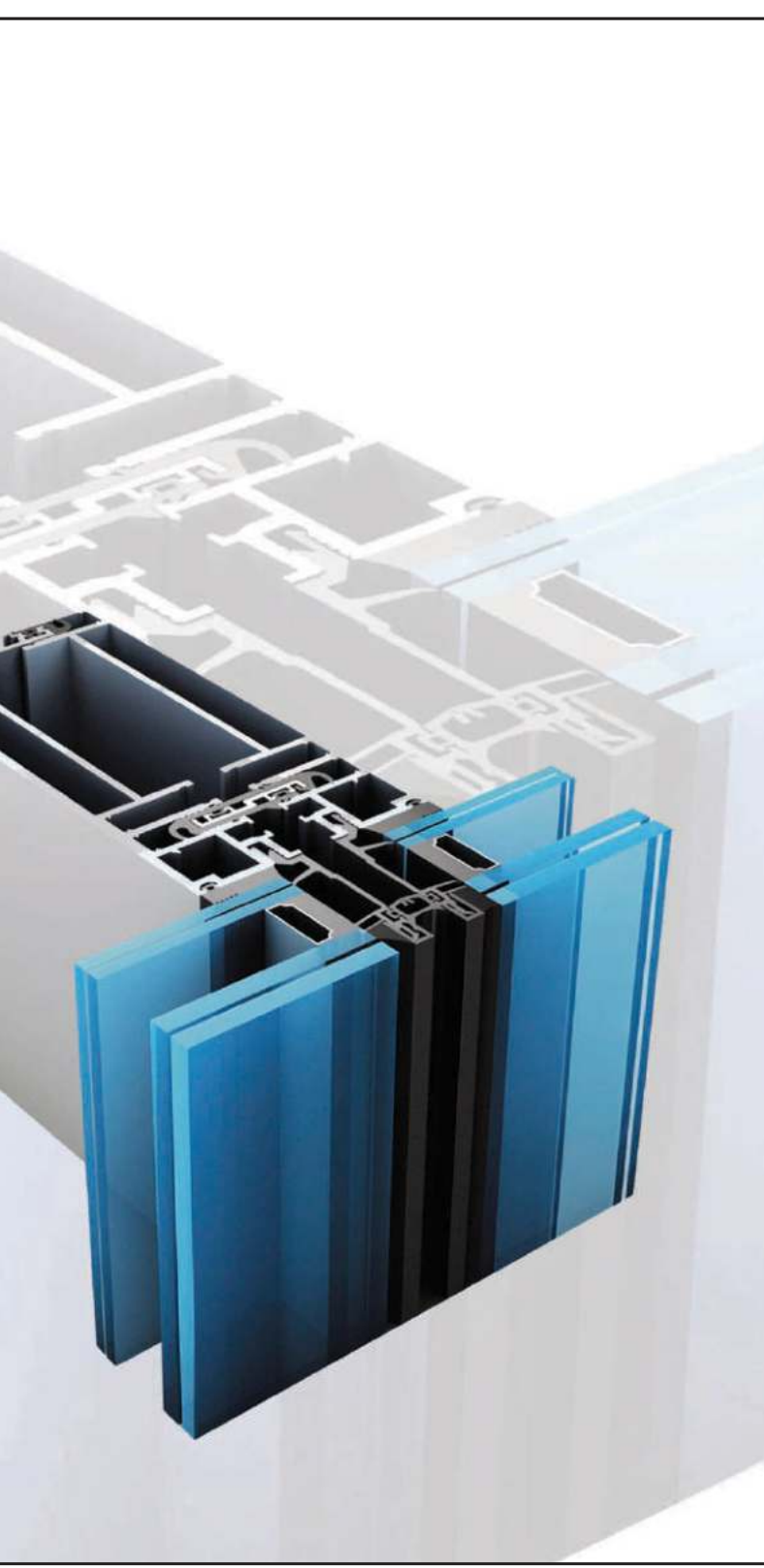

## UNITIZED SYSTEM

After a period of time, unitized design has been occurring in curtain wall technology. In this system, the mullion members are separately installed first, then pre-assembled framing units and placed in between them. These units could be full story height, or they could be divided into a spandrel unit and a vision glass unit.

Hybrid system is advantageous to use for a long span of two floors, which can be reinforced by steel. This system needs a large amount of labor for field jointing work and the erection time is comparatively Greater.

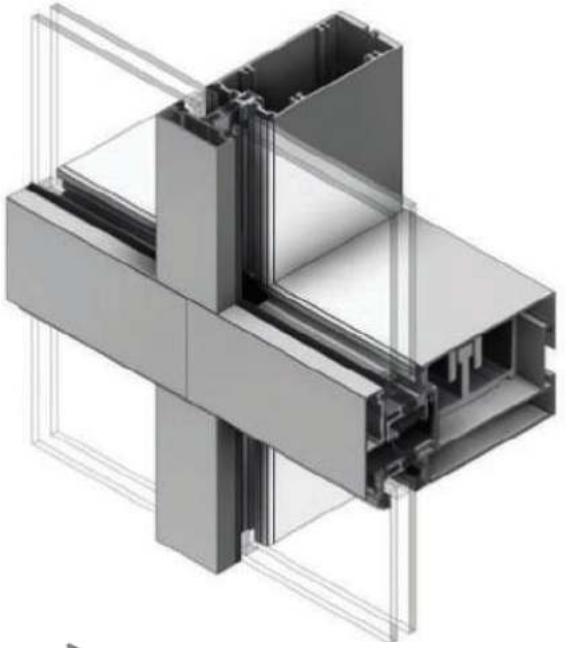

## TOGGLE SYSTEM

Mechanical structural glazing curtain walling is a technical design enabling the creation of fully glazed façades without attaching aluminium frames to the glazing. As an alternative to SSG (Structural Sealant Glazing) which uses traditional silicone sealant, the glazing for the fixed and opening sections is attached to the aluminiumframe mechanically using special aluminium supports.



# Curtain Glass SKYLIGHT SYSTEM



Dome skylights can be used as roofs of stadiums, theaters, exhibition halls, waiting halls, stadium stands, gas stations, toll stations, awnings, hangars, factory buildings, and other buildings.

**Advantage:**

1. Stable and Aesthetic
2. Structure is durable for Many years
3. Extensive Applications: Storage, Warehouse, Exhibition Hall, Terminal Building, Stadium, Theater, Special shaped Buildings, etc
4. High anti-rust performance
5. Flexible composition: Doors and Day-lighting roof can be installed at any position

# CASEMENT WINDOW

From various kinds of casement windows there are some of the most popular window styles in the world today. This system has been in existence since the beginning of the 18th century. First constructed out of iron and true leaded divisions, the casement window was only for the very wealthy. However, the Industrial Revolution changed this due to the introduction of mass production of glass and wooden frames. Today wooden casement windows are still very popular but will rot, warp, possibly succumb to termites, and require stain or paint maintenance. To avoid these flaws all Solar Innovations casement windows are made from an aluminum thermal frame, which helps with insulation and protection from the elements.



# FACADE CLADDING SYSTEM



## Aluminium Composite Panels

Aluminium composite panel (ACP), made of aluminium composite material (ACM), is a flat panel consisting of two thin coil-coated aluminium sheets bonded to a non-aluminium core. ACP is frequently used for external cladding or facades of buildings, insulation, and signage. You can also find the ACP as fire-rated which mostly uses in the industrial sector.



## Metal Cladding

For wall cladding, certain various types of metal can be used. Cladding, and stainless steel cladding, in particular, is a highly qualitative and sustainable solution to maintain the facade of a building throughout the years. The most commonly used materials for cladding are stainless steel, zinc, and copper. These sheets are available in different thicknesses.

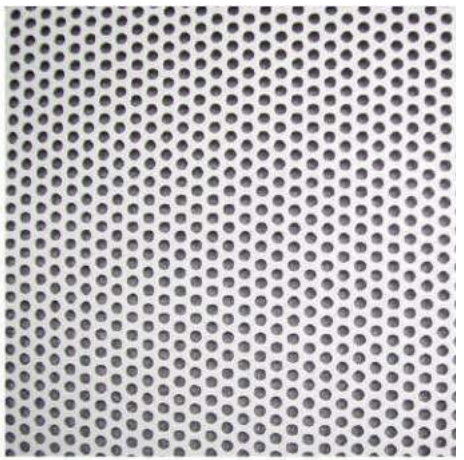

## Perforated Aluminium Cladding

The versatile collection has many uses - from an interior partition or feature wall to a stunning exterior facade. The new laser-cut metal collection provides a unique design solution for both interior and exterior metal applications.

# ALUMINIUM COMPOSITE PANEL & PERFORATED ALUMINUM & MS SHEET PANEL

## DESIGN FEATURES BY PANEL

- Partially perforated in many different patterned
- Exclusively provide a decorative appearance
- Designed with a special aluminium& MS
- The right balance between rigidity and flexibility
- Cover the external walls of a building
- Thin coil-coated aluminium sheets bonded



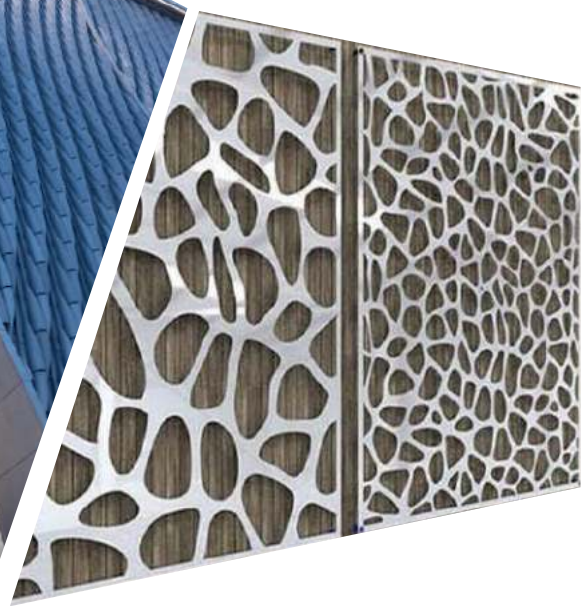

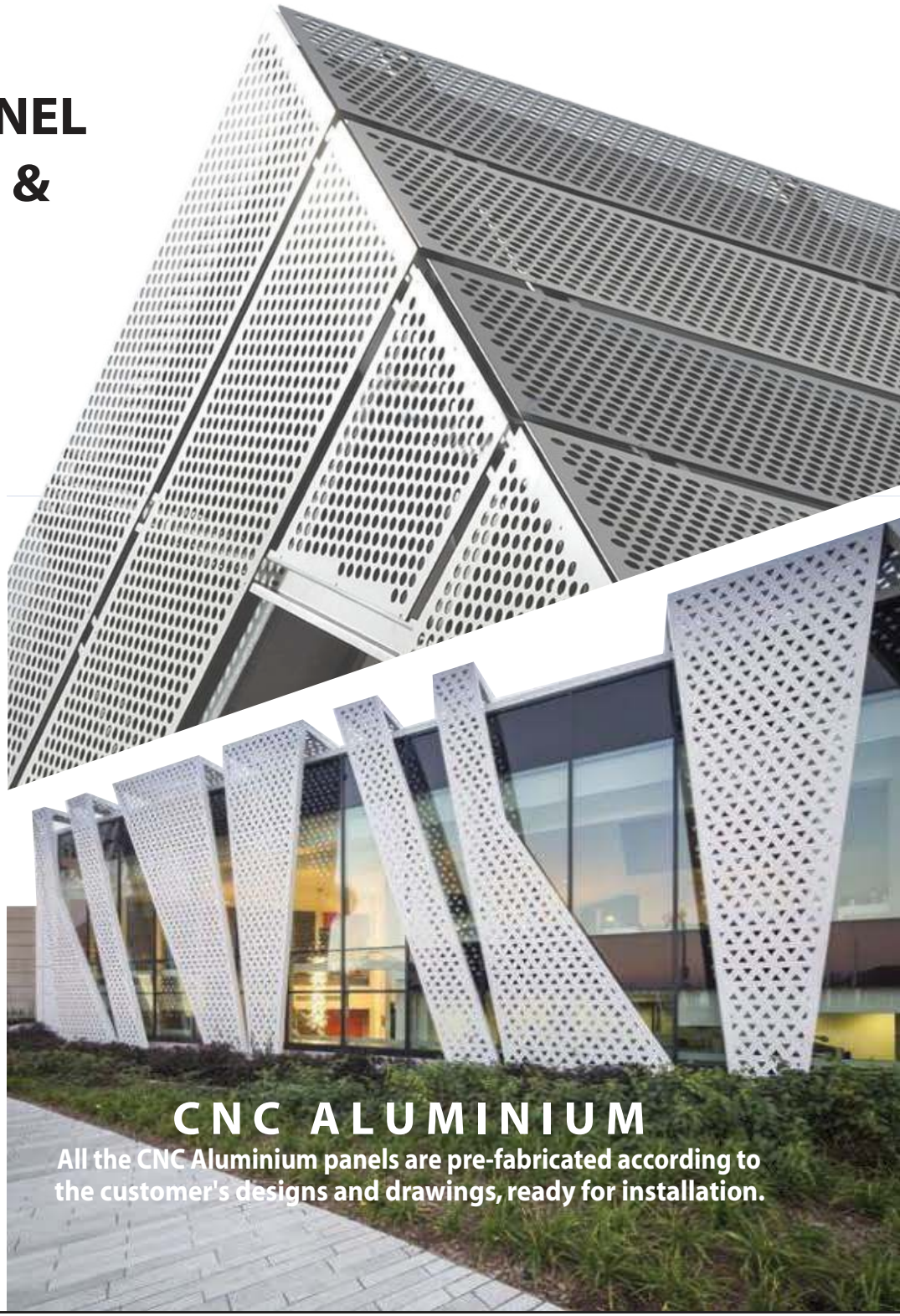

### CNC ALUMINIUM

**All the CNC Aluminium panels are pre-fabricated according to the customer's designs and drawings, ready for installation.**

# ALUMINIUM LOUVERS



## LOUVER SYSTEM

A louver is a window blind or shutter with horizontal slats that are angled to admit light and air, but to keep out rain and direct sunshine. The angle of the slats is adjustable usually in blinds and windows, or fixed.

- Angled to control the airflow and ventilation.
- Energy efficiency to reduce heating and cooling costs.
- Versatile and available in different design

## Box louver

To outfit the ever-changing necessities of our patrons in the best possible way, we are engaged in offering our client Aluminum Box Louvers. Features: - Quick installation- High Performance

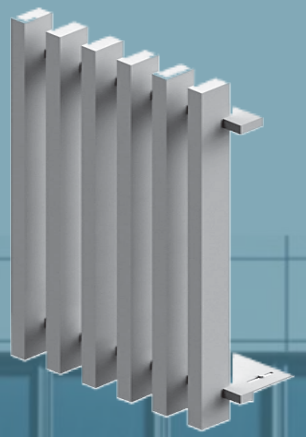

## Ztype louver

Z-type Louvers are available in various sizes and specifications. Our products are Superior in quality, sustainable in design, strong in appearance, and are widely installed in several apartments, buildings, and companies.



## Oval Shape louver

Oval Shape louver configurations can be as striking as they are effective, shading the facade against low or high sun angles while making an aesthetic statement. Composition can affect performance.

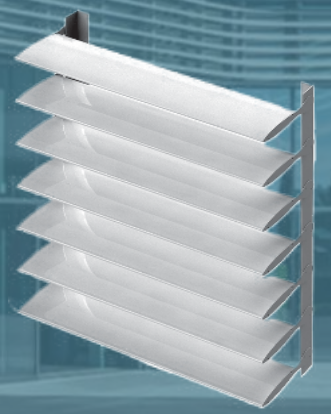

# SUN BREAKERS

Sunbreakers are an attractive system of ensuring comfortable living in buildings. These are aluminium profiles of ellipsoid or rectangular shape, fixed or adjustable, mounted on aluminum or steel construction in front of the glass facade of the building. Fixed slat sun breakers are often used as an aesthetic solution for enveloping the entire building or part of it, even in places where there are no glass surfaces.

They provide excellent protection against overheating, are energy-saving, and offer the possibility of regulating light inside the room. Sunbreakers protect against glare while providing a high level of transparency and are also distinguished by stability in high winds, hail resistance, and exceptionally long service life.



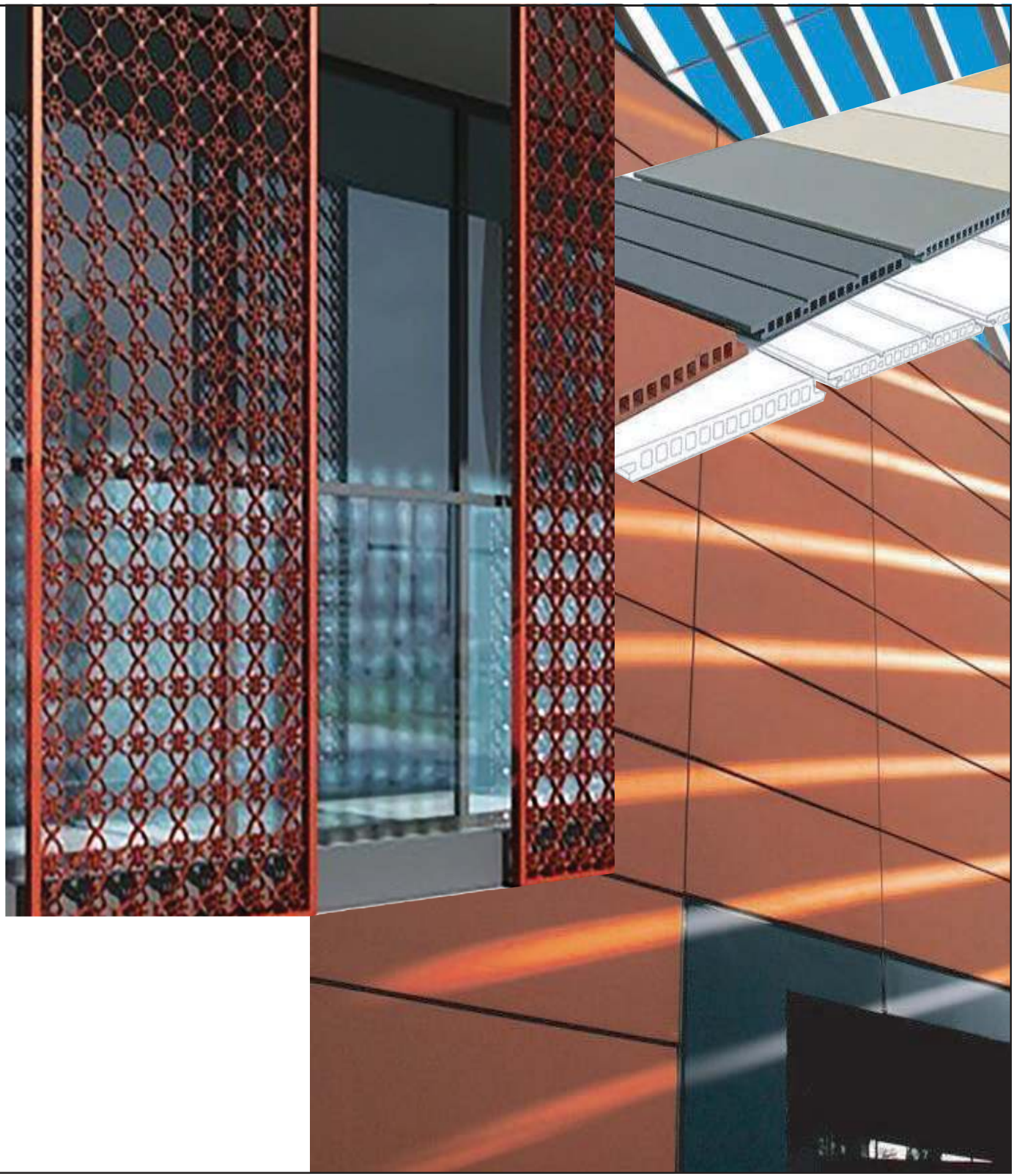

# TERRACOTTA PANEL
## (Clay Based)

Terracotta Rainscreen Cladding system is based on the principle of the rain screen. Comprised of terracotta panels, supporting track systems, ventilated cavities, and vapor barriers, it's a back-ventilated curtain wall system.

One of the highlights is the ship-lapped open joints, which makes it possible for the air to circulate between the cladding and insulation, thus, minimizing pressure differential inside and outside the wall cavities. Such a system can shield most of the rain and snow from entering building envelopes. Meanwhile, a small amount of infiltrated water could be drained away through the system so as to protect the wall constructions of the building.

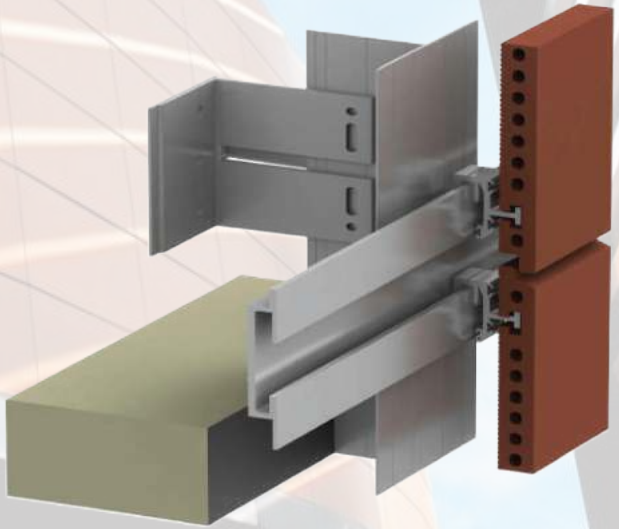



# MODIFIED CLAY MATERIALS
## (MCM)

Modified clay materials are an amalgamation of clay and sands through an unfired patent manufacturing technology. The clay is constituted with recycled materials to reduce carbon footprint, thus making the closet pure form with nature.

The products come with a base thickness of only 2.5 mm. They are extremely lightweighted, non-breakable & flexible yet suitable for both exterior & interior applications. Also, the natural characteristics of the soil offer the benefits of fire retardant, breathability, non-toxic, durability & recyclability features.





# SOME OF OUR REPUTED EXTERIOR WORK

Voice of Arch. & Eng.

স্থপতি ও প্রকৌশলীর কণ্ঠস্বর

## INSTITUTE OF ARCHITECTS BANGLADESH

**Work Executed**

Materials With
Fabrication Sponsor




SOME OF
OUR
REPUTED
EXTERIOR
WORK





PANI BHABAN




## Work Executed

Stick System Curtin Wall Casement Window,Fixed & Sliding Window, Glass Canopy, ACP Canopy




# BSC TOWER

Bangladesh Shipping Corporation

@ Dainik Bangla Mor, Motijhel, Dhaka

**Work Executed**

Stick System Curtin Wall,
Sliding & Fixed Partation,
ACP

**Glass Brand**

China Reflective Lead Blue



# 71 TOWER

**Agrabad**

Chattagram



# FS
## SQUARE

**@ Mirpur 10, Dhaka**

**Work Executed**

DGU Semi-Unitize Curtain wall, Celling, Luver, ACP.

**Glass Brand**

SAINT-GOBAIN



# PROBASHI KALLYAN BHABAN

**@ Ramna, Dhaka**

**Work Executed**

Stick System Glass Work, Spaider Glass, Luver, ACP.

**Glass Brand**

SAINT-GOBAIN

# BONGOBONDHU
# Study Center
## BCS ACADEMY




**Work Executed**

Stick System Curtin Wall , Spider Glass Work, S.S & M.S Railing, Sliding & Fixed, Interior Glass Work, ACP

**Glass Brand**

SAINT-GOBAIN

**Work Executed**

Stick System Curtin Wall

**Glass Brand**

China Lead Blue



# RH HOME CENTER

@ GREEN ROAD, Dhaka-1205



# ENERGYPAC

## POWER GENERATION OFFICE

@ 25 Tejgaon I/A, Dhaka-1208




**Work Executed**

Exterior Glass, Louver, Railing, Falls Ceiling work.

10mm Clear Tempered, Eye Shape louver & Plain Gypsum.

# BSMMU Convention Center

**@ MINTU ROAD, DHAKA**



**PROJECT ABSTRACT:**

Lamonation For Void, 10mm Dew-Drop, 10mm Clear Glass & ACP

**Glass Brand**

SAINT-GOBAIN

# BSMMU

## DIAGNOSTIC & ONCOLOGY DEPARTMENT

SHABAGH, DHAKA

## PADMA LIFE INSURANCE

@ 115Kazi Nazrul Islam Ave, Dhaka-1205

**Work Executed**

Stick System Curtin Wall Spider Glass Work,S.S & M.S Railing, Fixed, Sliding & Interior Glass

**Glass Brand**

China Reflective Glass

# Air Movement Office

- Dhaka Cantoment, Dhaka





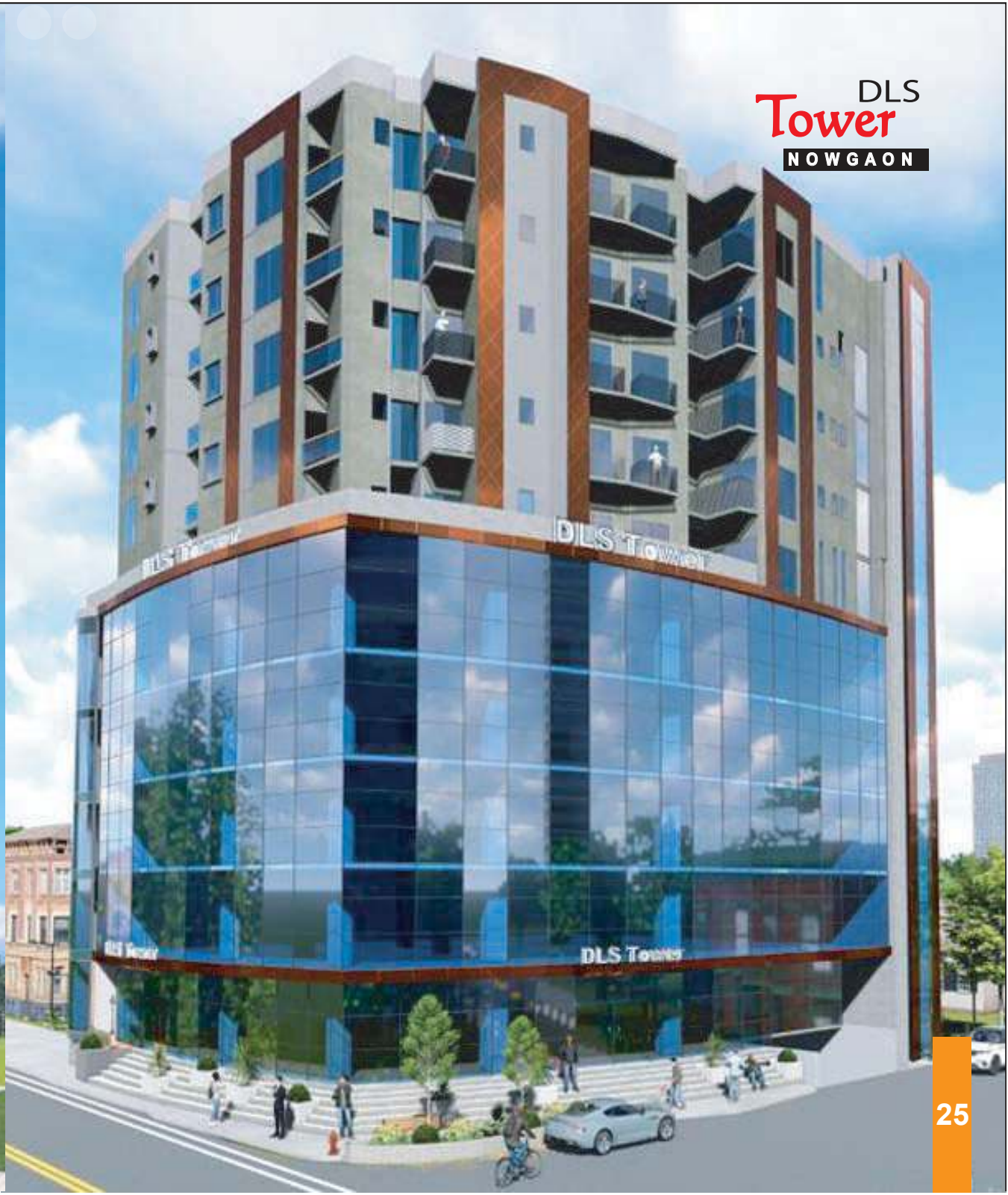
DLS
Tower
NOWGAON
DLS Tower
DLS Tower

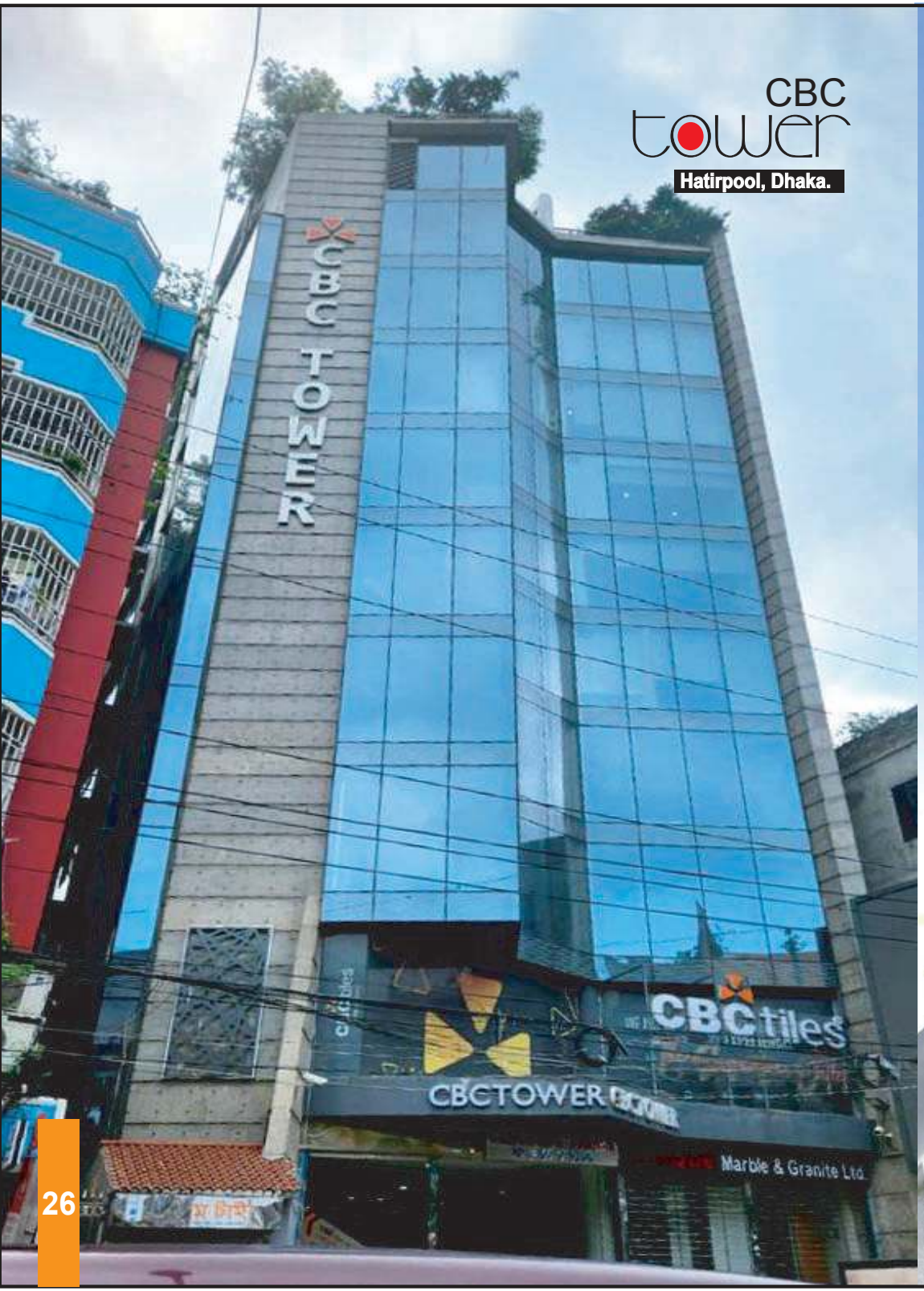


CBC
tower
Hatirpool, Dhaka.



## NANDAN ORCHAD Tower




## masum Plaza

- Uttara, Dhaka






**Advantage with**



Voice of Arch. & Eng.

- Structurally, the strongest
- Has a modern aesthetic
- Virtually maintenance-free

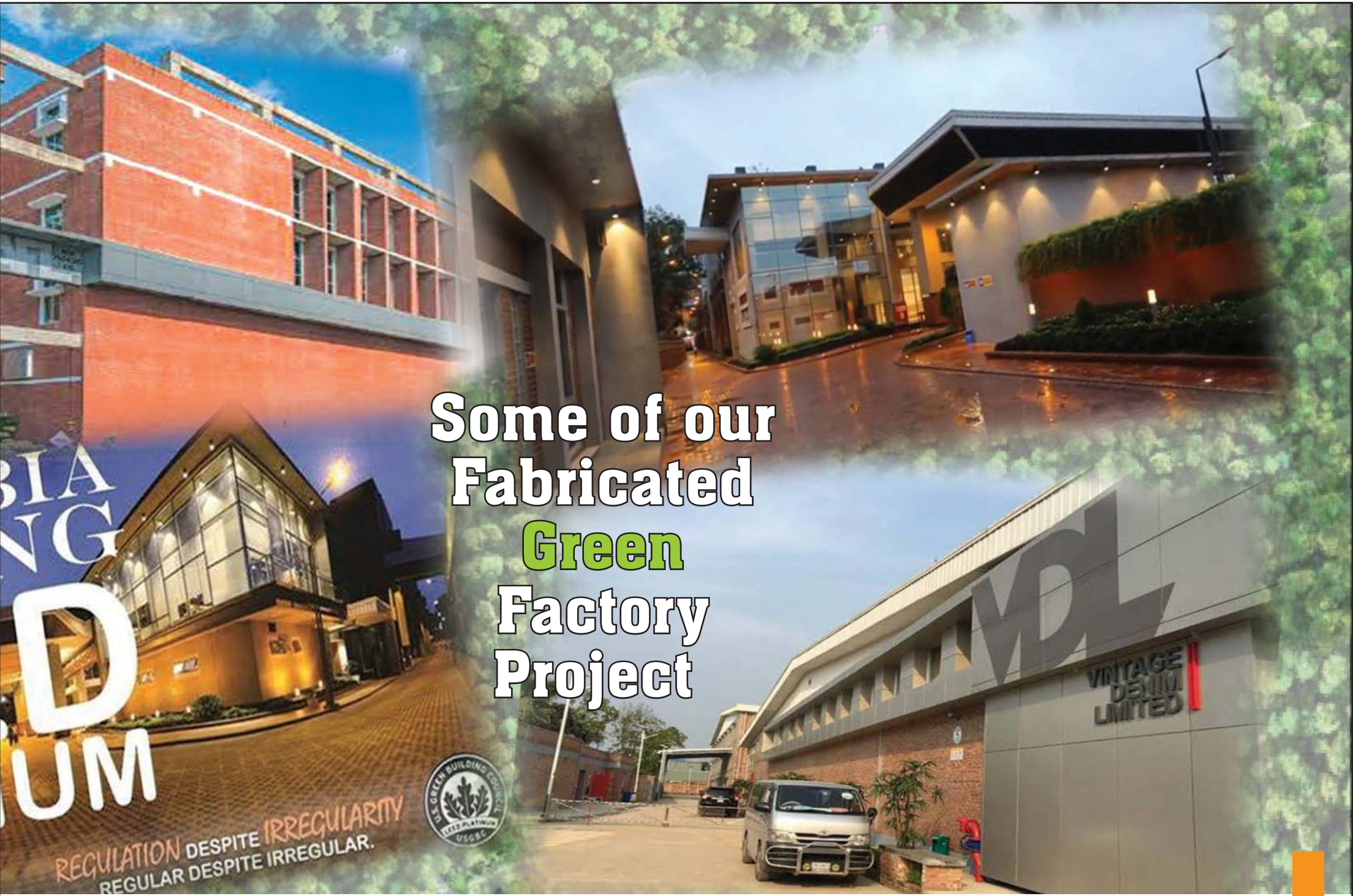


Aluminium can be easily recycled

Comes with good thermal resistance

Durable. No rotting, and absolute resistance against termites

# ASSEMBLY WORKSHOP







Automatic Aluminum Cuttting machine



Aluminum Cutting machine



Gondolla



Pull out test Machine



Aluminum Cutting machine

Suppliyer: SAINT-GOBAIN GLASS | WACAN ALUMINU | PILKINGTON | BAFONI | 伟业铝材 | HOPO Window and Door Solutions

# VAE

## Some Types of **Aluminum Window**

Fixed & Sliding Window



UP SLIDING WINDOW









FIXED WITH PIVOT CASEMENT WINDOW



TOP HUNG WINDOW



Tilt Turn Window



## Performance & Accreditations

- Multi-point Locking
- Glazing Option
- U-Value Control Single Multipole
- Air Tightness
- Water Tightness
- Wind Load Tolerance
- Available in Double or Tripole Track

# VAE .... Life Style

## DOOR & WINDOW



Aluminium Folding Door

Aluminum Sliding Door



Swing Door



LIFT UP SLIDING DOOR



Aluminum KFC Door



VAE Casement Door





10mm Glass Door

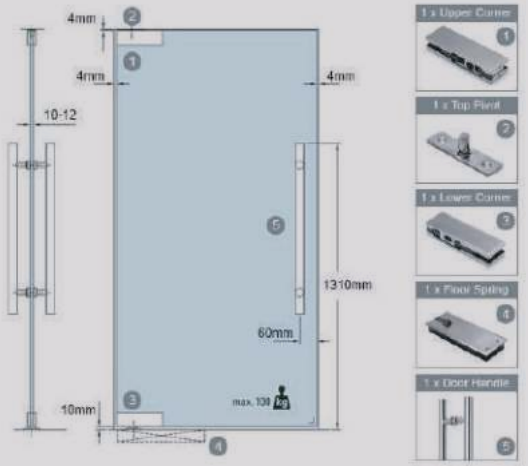

# VAE.... Life Style

## DOOR & WINDOW





*Complete Door & Window Solutions.*

# Voice of Arch. & Eng.

## স্থপতি ও প্রকৌশলীর প্রতিধ্বনি

### Corporate Office

Suite # 14, Level # 03, Aziz Super Market
Shahbag, Dhaka-1000, Bangladesh.
vae.operation@gmail.com
+88 **01711 984 803**

### Factory Address

615/9/A, Bosila Setu Road
Mohammadpur, Dhaka-1207, Bangladesh.
vae.operation@vaebd.com
+88 **01611 984 803, 01611 984 806-7**

"**Architecture**
is about experience:
not only visual but also what you
can touch, what you can feel.
Ma Yansong"



Tamu's Collection
Trusted Partner For Your needs
Since 2014

IT Future
itfuture_tapu@yahoo.com
Service first quality must